# INTRODUCTION TO ROBUST CONTROL

## 7.1: Review of SISO Nyquist stability

- The control designs we have investigated are “optimal”.
- Don’t let that give you a false sense of security!
- Are they robust? Do they work well even if our plant model is inaccurate, or if it changes slightly over time?
- We will first review Nyquist, look at stability margins for LQR and LQG and look for ways to improve them.
- Nyquist stability criterion is a graphical way to determine stability of a feedback system.
- Originally developed as a method to determine stability without having to solve for closed-loop poles (difficult in 1932!).
- Nyquist still useful for several reasons:
  - Gain margin and phase margin—measures of stability and robustness—readily determined from plot.
  - Can be applied to systems with time delays (Routh cannot).
  - Modifications to controller frequency response which improve gain- and phase-margin may be readily observed from Nyquist map.
- We primarily use Nyquist to observe $GM$ and $PM$. Indicators of robustness.

## *The Nyquist test*

- First, compute the loop transfer function $L(s) = G(s)K(s)$.
- Plot the loop frequency response $L(j\omega) = L(s)|_{s=j\omega}$ as a polar plot. That is, plot the set of points $(\mathbb{R}\{L(j\omega)\}, \mathbb{I}\{L(j\omega)\})$ for $-\infty < \omega < \infty$.
- Resulting plot is a "Nyquist plot," or "Nyquist map."
- $N_p$ is the number of open-loop unstable poles in $L(s)$.
- $N_c$ is the number of clockwise encirclements of $-1$ in the Nyquist map.
- $N_z = N_p + N_c$ is the number of closed-loop unstable poles. System stable iff $N_z = 0$.
- Special cases when $L(s)$ has poles on the $j\omega$-axis. Won't worry about them here.

**EXAMPLE:** $K(s) = 1$.

$$G(s) = \frac{5}{(s+1)^2}$$

$$\text{or, } L(j\omega) = \frac{5}{(j\omega+1)^2}$$

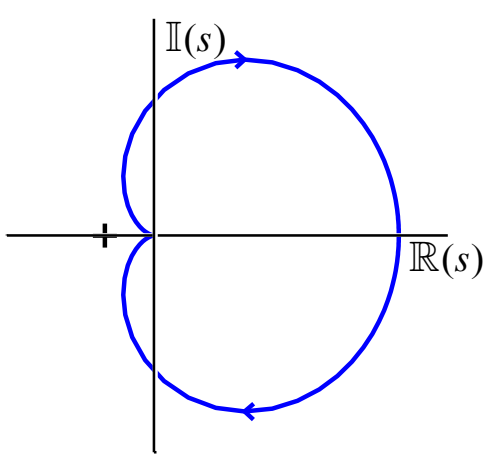


| $\omega$ | $\mathbb{R}\{L(j\omega)\}$ | $\mathbb{I}\{L(j\omega)\}$ |
|---|---|---|
| 0.0000 | 5.0000 | 0.0000 |
| 0.0088 | 4.9988 | -0.0879 |
| 0.0191 | 4.9945 | -0.1908 |
| 0.0415 | 4.9742 | -0.4135 |
| 0.0902 | 4.8797 | -0.8872 |
| 0.1959 | 4.4590 | -1.8172 |
| 0.4258 | 2.9333 | -3.0513 |
| 0.9253 | 0.2086 | -2.6856 |
| 2.0108 | -0.5983 | -0.7906 |
| 4.3697 | -0.2241 | -0.1082 |
| 9.4957 | -0.0536 | -0.0114 |
| 20.6351 | -0.0117 | -0.0011 |
| 500.0000 | -0.0000 | -0.0000 |

- No encirclements of $-1$, $N_c = 0$.
- No open-loop unstable poles $N_p = 0$.
- $N_z = N_c + N_p = 0$. Closed-loop system is stable.

*Gain margin*

- Uncertainty in plant may be modeled as

$$G(s) = gG_o(s)$$

where $G_o(s)$ is the nominal plant, $g$ is an unknown gain.

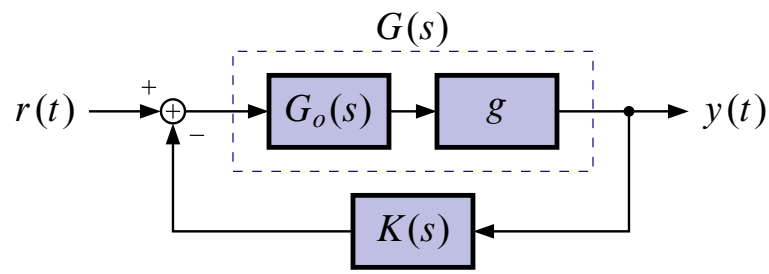


- Nyquist stability may be applied to the system
  - By plotting map for every admissible gain $g$.
  - By realizing that $g$ only magnifies/ shrinks the map and by revising the stability rule.

**NEW RULE:** $N_p$ is the number of open-loop unstable poles in $L(s)$. $N_c$ is the number of clockwise encirclements of $-1/g$ and $N_z$ is number of closed-loop unstable poles. System stable iff $N_z = N_p + N_c = 0$.

**DEFINITION:** The gain margin $GM^+$ is the minimum gain $> 1$ that results in an unstable closed-loop system.

**DEFINITION:** The downside gain margin $GM^-$ is the maximum positive gain $< 1$ that results in an unstable closed-loop system.

**EXAMPLE:** Consider a plant (with two open-loop unstable poles) and controller

$$G(s) = \frac{g}{s^2 - 2s + 1}; \qquad K(s) = \frac{1500s - 100}{s^2 + 30s + 400}.$$

The gain $g$ is uncertain but bounded $0.8 \le g \le 1.2$.

- The Nyquist map for this system is plotted (for $g = 1$).

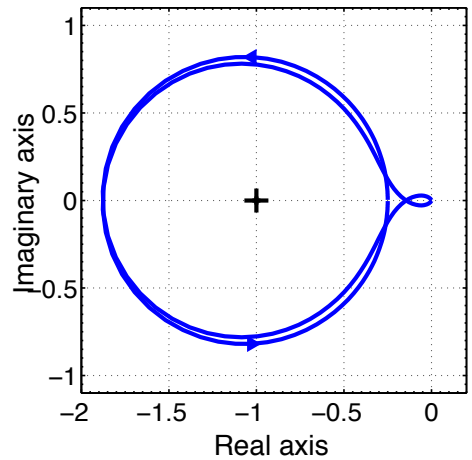


- The map crosses the real axis at $-0.25$ and at $-1.8$.
- $GM^+ = 1/0.25 = 4.0$.
  $GM^- = 1/1.8 = 0.56$.
- The system is therefore "robustly stable."

*Phase margin*

- Uncertainty may also be modeled as an uncertain phase shift

$$G(s) = e^{-j\phi} G_o(s).$$

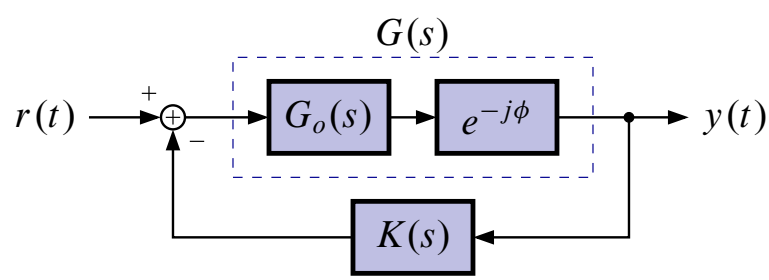


- This is a simplified model of an uncertain delay $G(s) = e^{-s\tau} G_o(s)$ or $G(j\omega) = e^{-j\omega\tau} G_o(j\omega)$, which is frequency dependent and harder to analyze.
- Multiplying a frequency response by $e^{-j\phi}$ results in a phase shift/ rotation of $\phi$ of each point in the Nyquist map.
- System becomes unstable when rotation causes map to go through the point $-1$.

**DEFINITION:** The phase margin $PM$ is the minimum amount of phase shift added to $L(s)$ that results in an unstable closed-loop system.

- Phase margin is the amount of rotation required to cause instability ➠ Determined by intersection point between Nyquist map and unit circle.

- Many Nyquist plots are like this one. Increasing loop gain magnifies the plot.
- $GM$ =1/(distance between origin and place where Nyquist map crosses real axis).
- If we increase gain, Nyquist map "stretches" and we may encircle $-1$.

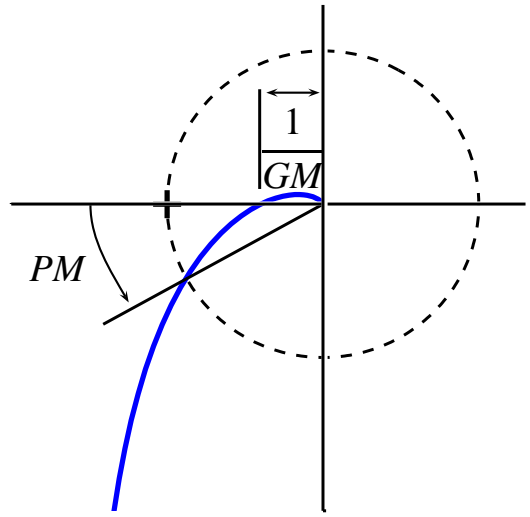

## 7.2: Robustness of LQR

- To date, we have analyzed our controllers by looking at the pole locations and time-domain performances.
- We can also look at the frequency-domain properties to get many new insights.

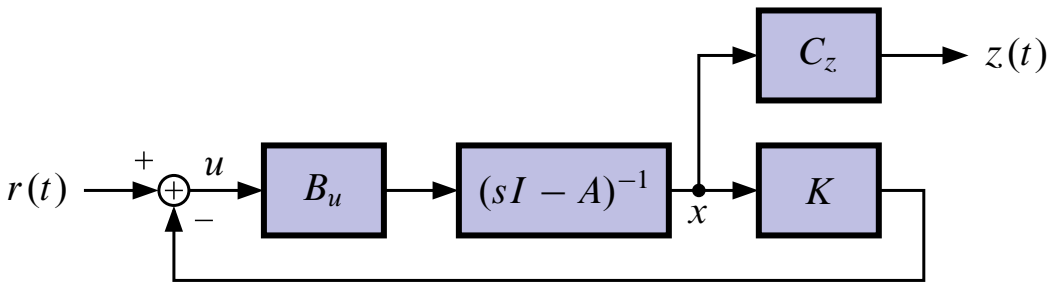


- Define

$$L(s) = K(sI - A)^{-1}B_u \qquad \text{Loop transfer function}$$

$$C(s) = C_z(sI - A)^{-1}B_u \qquad \text{Cost transfer function } G_{zu}(s)$$

- $L(s)$ is the loop we are closing.
- $C(s)$ describes how control inputs influence the cost (state).
- The two transfer functions are related in a special way:

$$[I + L(-s)]^T R[I + L(s)] = R + C^T(-s)C(s).$$

This is called the *KALMAN FREQUENCY-DOMAIN EQUALITY.*

*Proof of the Kalman frequency-domain equality*

- Our main interest is to show how to relate optimal steady-state time-domain solution to frequency domain.
- Optimal steady-state control solves

$$u = -Kx$$

$$K = R^{-1}B_u^T P$$

$$0 = -A^T P - PA - Q + PB_u R^{-1} B_u^T P,$$

and we make the assumption that $Q = C_z^T C_z$.

- Introduce Laplace variable $\pm sP$.

$$\underbrace{P(sI - A)}_{(1)} + (-sI - A^T)P - \underbrace{Q}_{(2)} + \underbrace{PB_u R^{-1} B_u^T P}_{(3)} = 0.$$

- Pre-multiply by $B_u^T(-sI - A^T)^{-1}$; post-multiply by $(sI - A)^{-1}B_u$.

(1) $B_u^T(-sI - A^T)^{-1}PB_u = B_u^T(-sI - A^T)^{-1}\underbrace{PB_u R^{-1}}_{K^T} R = L^T(-s)R.$

(2) $B_u^T(-sI - A^T)^{-1}Q(sI - A)^{-1}B_u = B_u^T(-sI - A^T)C_z^T C_z(sI - A)^{-1}B_u.$

Then, $(2) = C^T(-s)C(s)$.

(3) $B_u^T(-sI - A^T)^{-1}PB_u R^{-1}B_u^T P(sI - A)^{-1}B_u =$
$B_u^T(-sI - A^T)^{-1}K^T RK(sI - A)^{-1}B_u = L^T(-s)RL(s)$

- The A.R.E. becomes

$$RL(s) + L^T(-s)R + L(-s)^T RL(s) = C^T(-s)C(s).$$

- Complete the square

$$[I + L(-s)]^T R[I + L(s)] = R + C^T(-s)C(s).$$

- Consider the case with only one input. $L(s)$ is scalar. Let $s = j\omega$.

$$[1 + L(-j\omega)]R[1 + L(j\omega)] = R + C^T(-j\omega)C(j\omega).$$

- $R$ is a scalar, and $R > 0$ so we can divide

$$[1 + L(-j\omega)][1 + L(j\omega)] = 1 + \frac{1}{R}C^T(-j\omega)C(j\omega)$$

$$|1 + L(j\omega)|^2 = 1 + \frac{1}{R}|C(j\omega)|^2.$$

- Since $\frac{1}{R}|C(j\omega)|^2 \geq 0$ then we get the inequality

$$|1 + L(j\omega)|^2 \geq 1.$$

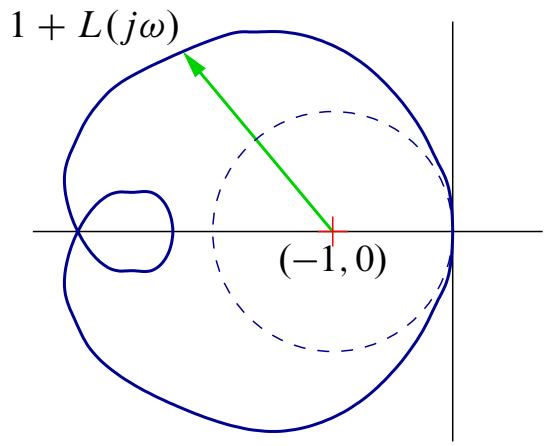


- What does this mean?
- $1 + L(j\omega)$ is the vector from the point $(-1, 0)$ to $L(j\omega)$ in the $s$-plane.
- The KFDE says the $L(j\omega)$ is excluded from the unit circle centered at $(-1, 0)$. Recall that the point $(-1, 0)$ is the critical point for stability analysis using Nyquist.
- For stability, we need to determine how many times the loop transfer function encircles the point $(-1, 0)$.
- We know that the optimum controller stabilizes the system, so counting encirclements will not be very enlightening.
- More important: What if the system changes or our model is wrong—will the number of encirclements be different than we expected? ➠ Instability.
- Basic robustness question.
- But, note that LQR guarantees that $L(j\omega)$ is some distance from the critical point so it will take *quite large changes* to the system to change number of encirclements.

- The optimal LQR controller has very large gain/phase margins.

  ➠ If open-loop system is stable, then any $g \in (0, \infty)$ yields a stable closed-loop system.

  ➠ If open-loop system is unstable, then any $g \in (1/2, \infty)$ yields a stable closed-loop system.

  ➠ LQR phase margin of at least $\pm 60°$.

**LQR GAIN MARGIN:** Consider an example system with two unstable O.L. poles. Nyquist plot terminates at origin, stays outside the unit circle at $-1$, and encircles the $-1$ point twice.

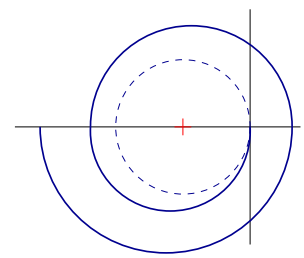

- The negative real axis intercept is to the left of $-2$ ➠ We could cut the gain in half and the number of encirclements would not change.
- Increasing the gain would move the intercept further left ➠ $g \in (1/2, \infty)$ good.

**LQR PHASE MARGIN:** The best way to look at phase margin is to look at the possible values of the loop phase when loop gain is $1$.

- Anywhere on the unit circle centered at the origin outside the unit circle centered at $-1$.
- Immediately clear that phase margin $\geq 60°$.
- Note: This does not imply that you can change the gain and phase simultaneously!

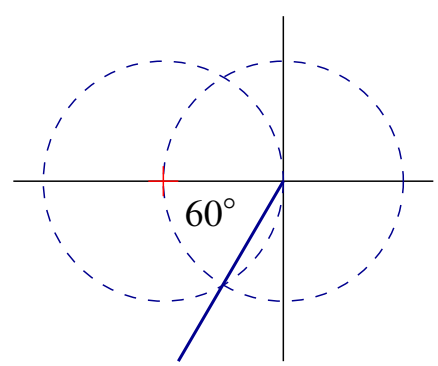


- There are similar statements for MIMO systems; not as enlightening

$$[I + L(-s)]^T R[I + L(s)] \geq R, \qquad R = \rho I$$

$$\underline{\sigma}[I + L(j\omega)] \geq 1 \quad \forall\, \omega.$$

- Singular values measure "size" of MIMO transfer-function matrix.

## 7.3: Robustness of LQG; LTR

- LQG offers a great way to design controllers for MIMO systems to achieve some desired *PERFORMANCE* specification.
- However, optimal controllers can be *VERY* sensitive to model errors.

**EXAMPLE:** Originally by Doyle, guru of robust control.

$$\dot{x}(t) = Ax(t) + B_u u(t) + B_w w(t)$$

$$y(t) = C_y x(t) + v(t)$$

with $w, v$ white.

$$A = \begin{bmatrix} 1 & 1 \\ 0 & 1 \end{bmatrix}, \quad B_u = \begin{bmatrix} 0 \\ 1 \end{bmatrix}, \quad B_w = \begin{bmatrix} 1 \\ 1 \end{bmatrix}, \quad C_y = \begin{bmatrix} 1 & 0 \end{bmatrix},$$

$$Q = \begin{bmatrix} 1 & 1 \\ 1 & 1 \end{bmatrix}, \quad S_w = Q, \quad S_v = R.$$

- Steady-state LQE/LQR gains are

$$K = \bar{K}\begin{bmatrix} 1 & 1 \end{bmatrix}, \qquad \bar{K} = \text{fn}(R)$$

$$L = \bar{L}\begin{bmatrix} 1 \\ 1 \end{bmatrix}, \qquad \bar{L} = \text{fn}(R).$$

- This is fine so far, but what do the gain and phase margins look like? First look at example when $R = 1$. (MATLAB code in appendix).

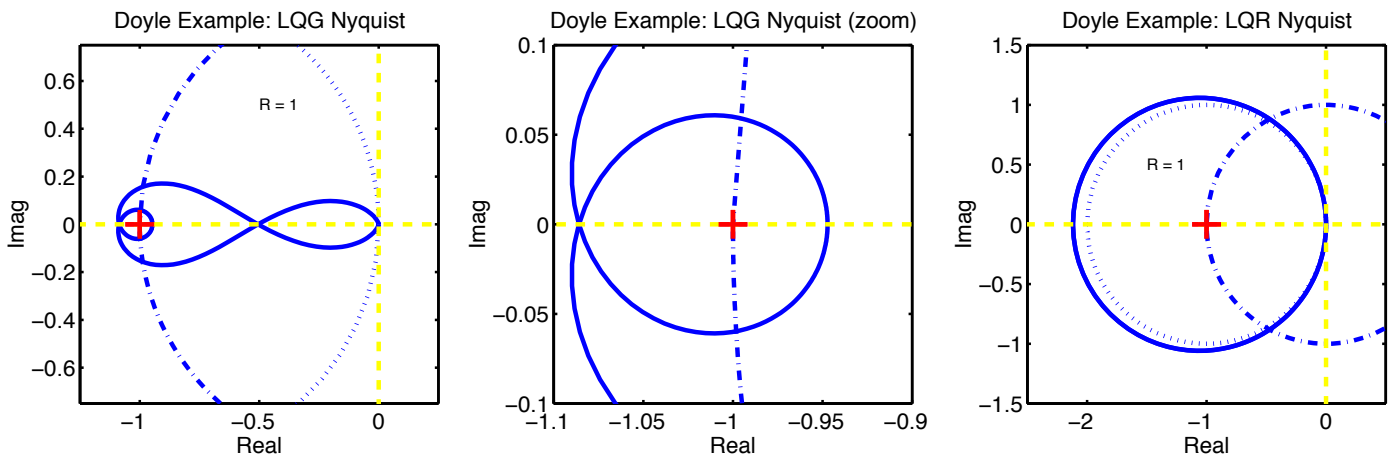


- Secondly, look at example when $R = 0.01$.

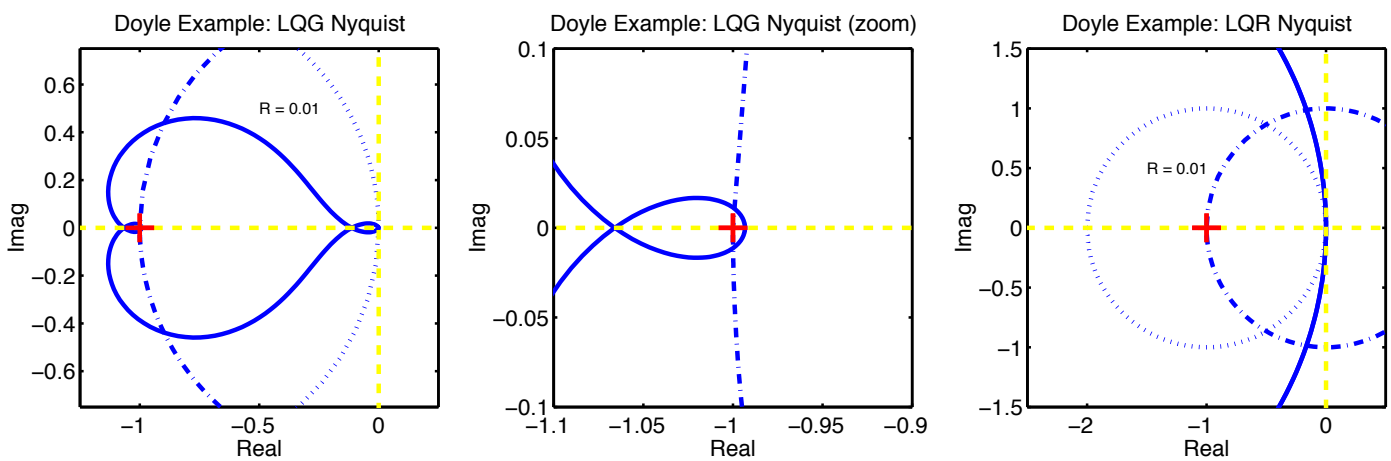


- Example shows that LQR retains guaranteed stability margin, but that stability margin of "optimal" LQG system may be arbitrarily small.(!)
- This does not mean that every LQG controller will have small margins.
- This does mean that you should be careful and check!

## Sensitivity and robustness

- Consider the situation where we design the controller using plant dynamics $A_o$ but it turns out that the true dynamics are at $A_o + \Delta A$.
- Model uses $\dot{x} = A_o x + B_u u + B_w w$. Compensator uses $A_c = A_o - B_u K - L C_y$.

- Then, closed-loop dynamics are (by separation theorem)

$$\begin{bmatrix} A_o - B_u K & B_u K \\ 0 & A_o - LC_y \end{bmatrix}.$$

- The model tells us we are stable and doing well.
- Actual system has dynamics $\dot{x} = (A_o + \Delta A)x + B_u u + B_w w$.
- Then, the closed-loop dynamics are (trust me!)

$$\begin{bmatrix} A_o + \Delta A - B_u K & B_u K \\ \Delta A & A_o - LC_y \end{bmatrix}.$$

- Dynamics not decoupled! We don't know where the eigenvalues are!
- Danger, Will Robinson! Danger!
- Similar with $\Delta B_u$ and $\Delta C_y$.
- What can we do?
  - Some approximate methods to improve stability margins of LQG.
  - Ways to guarantee robustness. (Performance in the face of uncertainty).
  - Tough to discuss in a class or two. We will give a brief preview.

## Loop transfer recovery (LTR)

- Method to modify LQG controller to recover robustness of LQR/ LQE.
- LTR generates suboptimal controllers with respect to LQG since any modification to original design is suboptimal.
- LTR provides a *family* of controllers with a range of robustness properties ➠ Select controller with best compromise between robustness and performance.

- Can best understand LTR by considering the following system:

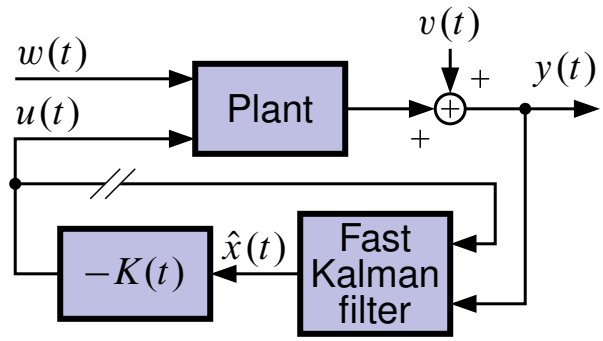


- Make LQG "look like" LQR by cutting feedback path to Kalman filter, making Kalman filter "sufficiently fast" that its dynamics may be ignored.
- Can accomplish this by adding fictitious noise $w_f(t)$ to control input $u(t)$ *DURING DESIGN (ONLY!).*
- This noise reduces filter's reliance on $u(t)$ and also makes filter faster.

$$\begin{aligned}\dot{x}(t) &= Ax(t) + B_u u(t) + B_w w(t) + B_u w_f(t)\\ &= Ax(t) + B_u u(t) + \left[\begin{array}{c:c} B_w & B_u \end{array}\right]\left[\begin{array}{c} w(t) \\ \hdashline w_f(t) \end{array}\right],\end{aligned}$$

and

$$S_{\left[\begin{array}{c} w \\ \hdashline w_f \end{array}\right]} = \left[\begin{array}{c:c} S_w & 0 \\ \hdashline 0 & S_{w_f} I \end{array}\right].$$

- LTR increases spectral density of fictitious noise until acceptable robustness is achieved.
- Can show (see text) that robustness approaches LQR robustness if # measurements $\geq$ # control inputs and plant is minimum-phase.

## <u>*Alternate LTR*</u>

- An alternative form of LTR uses the cost function

$$J = \mathbb{E}\left[x^T(\infty)\left(Q + \rho C_y^T C_y\right)x(\infty) + u^T(\infty)Ru(\infty)\right].$$

- The added term $\rho C_y^T C_y$ increases robustness but results in sub-optimal control with respect to original cost function.
- Can use this version of LTR when # measurements $\leq$ # control inputs and plant is minimum-phase.

*Frequency-shaped LTR*

- The fictitious noise added to LTR may be restricted to a certain frequency band by adding filter states to the problem.
- Models frequency-dependent uncertainty in plant model (often the case).

*Other approximate methods to improve LQR robustness*

1. Look at loop transfer function to see if there is a pole/ zero cancellation problem. Use perturbed models and see if compensator zero missing plant pole. Reduce compensator authority.
2. Make several models of the system

$$\dot{x}_i = A_i x_i + B_{u_i} u + B_{w_i} w, \qquad i = 1 \ldots m.$$

   - Set up $J_i$ for each.
   - Use the models to capture something about the uncertainty.
   - Effective, but requires numerical search. Takes a while.
3. Guaranteed methods?
   - Much research going on right now.

# 7.4: Modeling uncertainty

## Modeling unstructured uncertainty

- $GM$ and $PM$ are special cases in modeling uncertainty in a plant.
- Many other types exist ➠ Here we consider perturbations to a nominal plant model.
- A perturbation is considered to be a bounded transfer function (with respect to its $\infty$-norm).
- This type of uncertainty is referred to as *unstructured* since no detailed model of perturbation is employed.

### *Types of unstructured uncertainty*

- Additive (unknown dynamics in parallel with the plant)
  $G(s) = G_o(s) + \Delta_a(s)$.

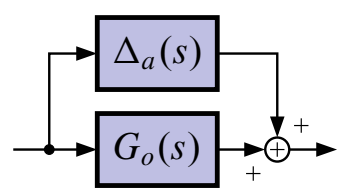


- Input multiplicative (unknown dynamics in series with the plant)
  $G(s) = G_o(s)[I + \Delta_i(s)]$.

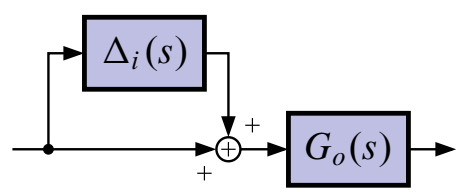


- Output multiplicative (unknown dynamics in series with the plant)
  $G(s) = [I + \Delta_o(s)]G_o(s)$.

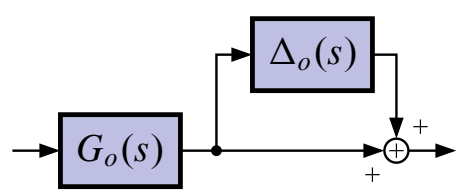


- Input feedback (uncertainty in gain/ phase/ pole locations of plant)
  $G(s) = G_o(s)[I - \Delta_{fi}(s)]^{-1}$.

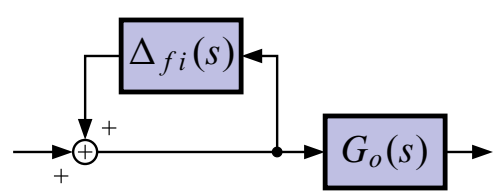


- Output feedback (uncertainty in gain/ phase/ pole locations of plant)
  $G(s) = [I - \Delta_{fo}(s)]^{-1}G_o(s)$.

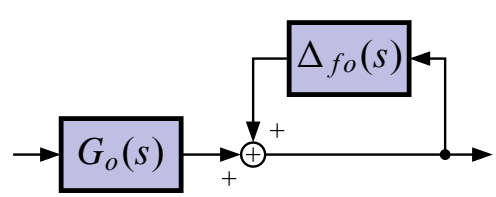

- Analysis may be performed when model perturbations are bounded

$$\bar{\sigma}\{\Delta'\} \leq \Delta_{\max}(j\omega)$$

where $\bar{\sigma}$ is the maximum singular value and $\Delta'$ is any of perturbation types considered.

- The bound $\Delta_{\max}$ is generally frequency-dependent, so uncertainty may vary over frequency.
- All the unstructured uncertainty models may be analyzed in a similar manner by placing them in a common framework.

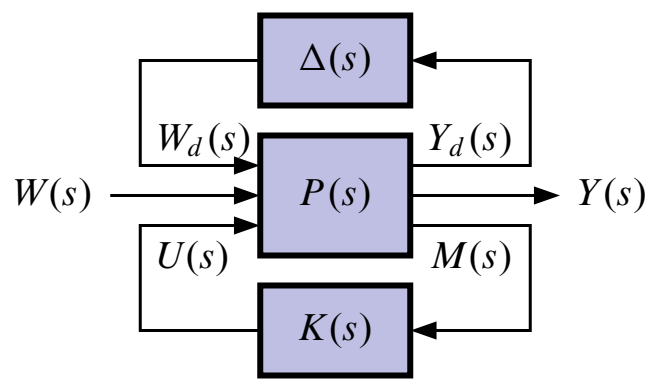


- The perturbation is normalized so $\|\Delta(j\omega)\|_\infty \leq 1$ by defining

$$\Delta(j\omega) = \frac{1}{\Delta_{\max}(j\omega)}\Delta'(j\omega)$$

and

$$\begin{bmatrix} Y_d(s) \\ \hdashline Y(s) \\ \hdashline M(s) \end{bmatrix} = \left[\begin{array}{c:c:c} P_{y_d w_d}(s) & P_{y_d w}(s) & P_{y_d u}(s) \\ \hdashline P_{y w_d}(s) & P_{y w}(s) & P_{y u}(s) \\ \hdashline P_{m w_d}(s) & P_{m w}(s) & P_{m u}(s) \end{array}\right] \begin{bmatrix} W_d(s) \\ \hdashline W(s) \\ \hdashline U(s) \end{bmatrix} = P(s) \begin{bmatrix} W_d(s) \\ \hdashline W(s) \\ \hdashline U(s) \end{bmatrix}.$$

- The "plant" $P(s)$ is generally a combination of $G_o(s)$ and uncertainties added together.

**EXAMPLE:** We consider a plant model to have input multiplicative uncertainty. The nominal model is accurate to within about $0.5\,\%$ at frequencies below $10\,\mathrm{rad\,s^{-1}}$ but is inaccurate to within about $50\,\%$ at frequencies above $1000\,\mathrm{rad\,s^{-1}}$. The accuracy should transition between these two extremes at intermediate frequencies.

- We can model the uncertainty as a first-order transfer function with a zero at $10\,\mathrm{rad\,s^{-1}}$ and a pole at $1000\,\mathrm{rad\,s^{-1}}$.

$$\Delta'_{\max}(j\omega) = 0.5\frac{(j\omega + 10)}{(j\omega + 1000)}.$$

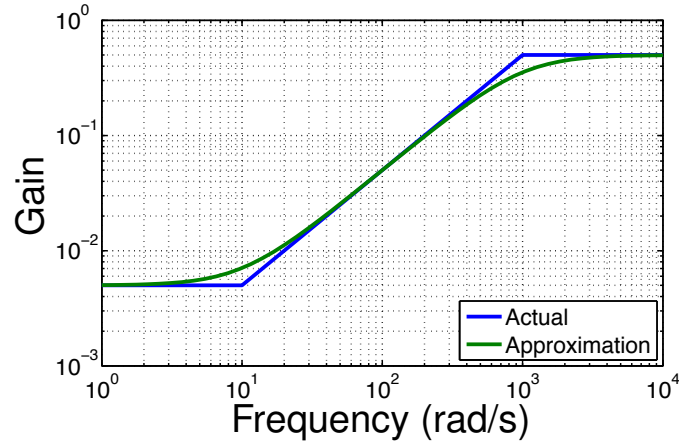


- The uncertainty is coupled into standard form as:

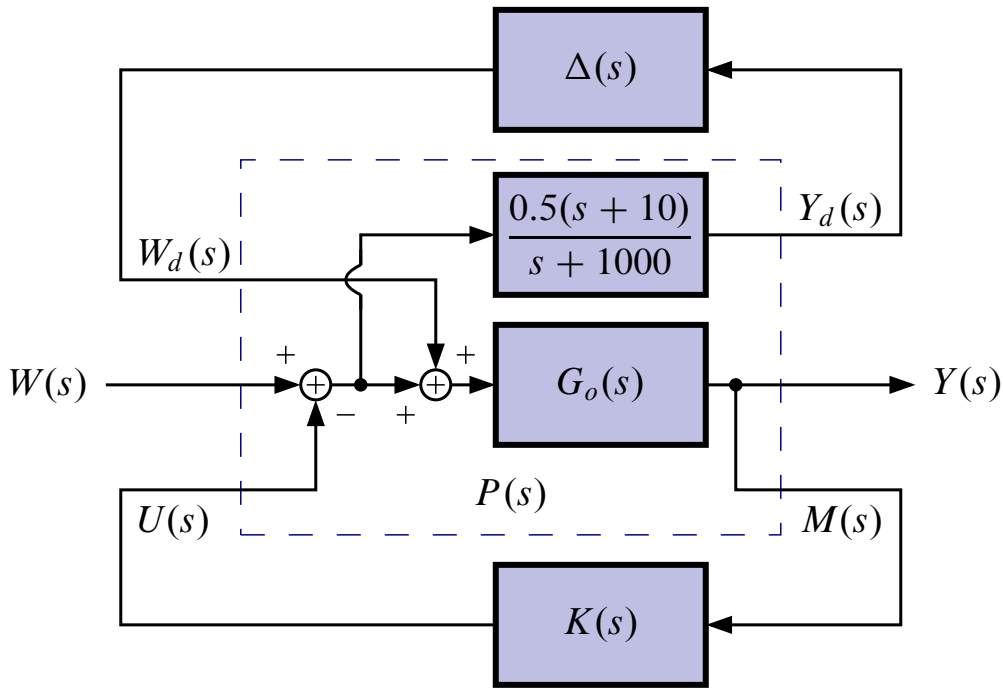


- From the diagram we see

$$P(s) = \left[\begin{array}{c:c:c} 0 & \dfrac{0.5(s+10)}{s+1000} & -\dfrac{0.5(s+10)}{s+1000} \\ \hdashline G_o(s) & G_o(s) & -G_o(s) \\ \hdashline G_o(s) & G_o(s) & -G_o(s) \end{array}\right].$$

## Modeling structured uncertainty

- Unstructured uncertainty is modeled by connecting unknown but bounded perturbations to the plant.

- Sometimes, more information is available ➠ New constraints on uncertainty add "structure" to the set of admissible perturbations.
  - Plant subject to multiple perturbations.
  - Plant has multiple uncertain parameters.
  - Multiple unstructured but independent uncertainties.
- Structured uncertainty model similar to before

$$\Delta(s) = \begin{bmatrix} \Delta_1(s) & 0 & \cdots & 0 \\ 0 & \Delta_2(s) & & 0 \\ \vdots & & \ddots & \vdots \\ 0 & 0 & \cdots & \Delta_n(s) \end{bmatrix}$$

  is block diagonal.
- An individual $\Delta_k(s)$ may represent an uncertain parameter (scalar) or an unstructured uncertainty.
- All blocks have $\|\Delta_k\|_\infty \leq 1$.

**EXAMPLE:** Consider the transfer function

$$G(s) = \frac{1}{(s+p_1)(s+p_2)}.$$

- The two poles are uncertain, as given by

$$p_1 \in [0.9, 1.1]; \quad p_2 \in [3, 5].$$

- We can model the poles as nominal values plus perturbation

$$p_1 = 1 + \delta_1; \quad p_2 = 4 + \delta_2$$

  where $-0.1 \leq \delta_1 \leq 0.1$ and $-1 \leq \delta_2 \leq 1$. We can place the perturbations in a feedback loop around the nominal plant as

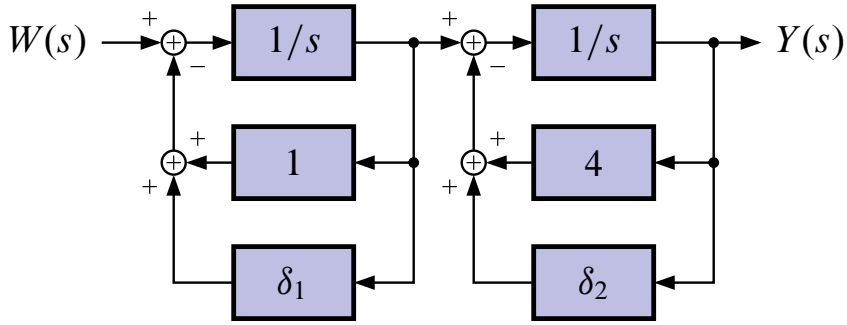


- The perturbations can be normalized and the system put into standard form such that

$$\|\Delta_1\|_\infty \le 1; \quad \|\Delta_2\|_\infty \le 1; \quad \|\Delta\|_\infty \le 1.$$

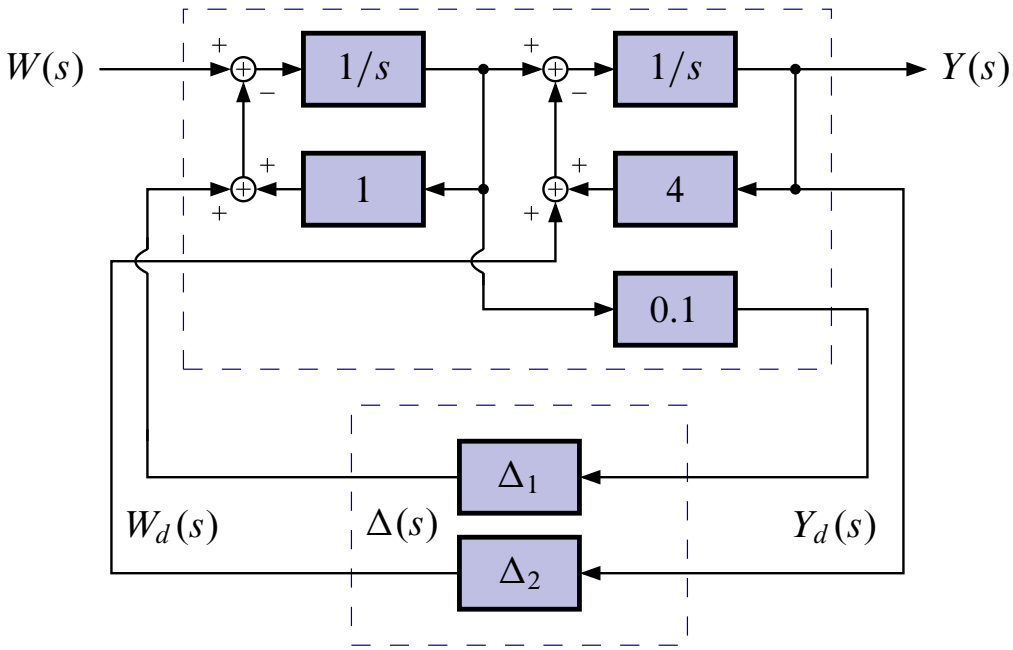

## 7.5: Four classic problems

- Will the techniques we have already learned work well if plant dynamics are uncertain? ➠ Analysis.
- How do we design controllers to account for the uncertainty explicitly? ➠ Synthesis.

### *Nominal stability*

- Controller stabilizes nominal system $G_o(s)$.
- Will generalize notion of stability to internal stability.
- Consider the following diagram.

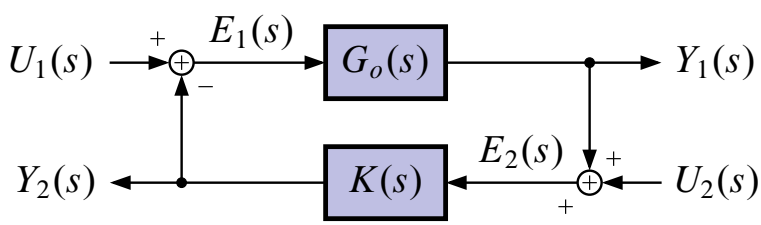


- Consider

$$\left[\begin{array}{c} E_1(s) \\ \hdashline E_2(s) \end{array}\right] = \left[\begin{array}{c:c} (I + KG_o)^{-1} & -(I + KG_o)^{-1}K \\ \hdashline (I + G_oK)^{-1}G_o & (I + G_oK)^{-1} \end{array}\right] \left[\begin{array}{c} U_1(s) \\ \hdashline U_2(s) \end{array}\right],$$

  which are the transfer functions from the inputs to the "errors". (equivalent to transfer functions from inputs to outputs).
- System is internally stable if all four transfer functions are stable.
- Nominal stability a relatively easy problem. For example, you might use pole-placement techniques from ECE4520/5520.

### *Robust stability*

- More interesting because we acknowledge uncertainty in our model.

- Now we must define what we think is wrong with the model ➠ Use structured or unstructured uncertainty models.
- Define $\Gamma$ to be the set of all admissible $G(s)$ given the nominal $G_o(s)$ and uncertainty model.

**ANALYSIS:** Does $K(s)$ internally stabilize all $G(s) \in \Gamma$?

**SYNTHESIS:** Design the controller $K(s)$ to maximize $\gamma$ where $\|\Delta(j\omega)\|_\infty \leq \gamma$ ➠ Make the system more robust to the types of uncertainty expected.

- No other performance objectives specified.

*Nominal performance*

- Decide on an objective. *e.g.,* disturbance rejection, reference tracking.
- Develop assumptions about inputs. *e.g.,* $r(t)$ is a step or ramp; $w(t)$ is stochastic WGN with known covariance.
- Characterize performance metric. *e.g.,* minimize the LQG cost function.
- For example, if $d$ is some kind of disturbance input,

$$K(s) = \arg\min_{\mathscr{H}} \left\{ \max_d \left[\text{energy}(y)\right] \right\}$$

with constraints on energy($d$). (minimize the worst case over $d$).

*Robust performance*

- Design $K(s)$ so that internal stability and performance of a specified type holds for all $G(s) \in \Gamma$.

- Disturbance rejection must be good for all possible $G(s)$.

$$K(s) = \arg\min_{\mathscr{H}} \left\{ \max_{d,\Delta} [\text{energy}(y)] \right\}$$

with constraints on energy($d$). (minimize the worst-case over $d$, $\Delta$).

- VERY VERY hard for some types of uncertainty.

## 7.6: Robust stability [analysis for unstructured uncertainty]

- We want to determine whether our controlled system is stable for all admissible plant perturbations $\Delta \in \bar{\Delta}$.
- Start with the 3-input 3-output standard form

$$\begin{bmatrix} Y_d(s) \\ \hdashline Y(s) \\ \hdashline M(s) \end{bmatrix} = \left[\begin{array}{c:c:c} P_{y_d w_d}(s) & P_{y_d w}(s) & P_{y_d u}(s) \\ \hdashline P_{y w_d}(s) & P_{y w}(s) & P_{y u}(s) \\ \hdashline P_{m w_d}(s) & P_{m w}(s) & P_{m u}(s) \end{array}\right] \begin{bmatrix} W_d(s) \\ \hdashline W(s) \\ \hdashline U(s) \end{bmatrix} = P(s) \begin{bmatrix} W_d(s) \\ \hdashline W(s) \\ \hdashline U(s) \end{bmatrix}.$$

- When a controller is added to the system,

$$\begin{aligned} U(s) &= K(s)M(s) \\ &= K(s)P_{m w_d}(s)W_d(s) + K(s)P_{m w}(s)W(s) + K(s)P_{m u}(s)U(s) \\ &= \{I - K(s)P_{m u}(s)\}^{-1}K(s)P_{m w_d}(s)W_d(s) + \\ &\qquad \{I - K(s)P_{m u}(s)\}^{-1}K(s)P_{m w}(s)W(s). \end{aligned}$$

- We get the following closed-loop system (dropping "$s$" for clarity):

$$\begin{bmatrix} Y_d \\ \hdashline Y \end{bmatrix} = \left[\begin{array}{c:c} N_{y_d w_d} & N_{y_d w} \\ \hdashline N_{y w_d} & N_{y w} \end{array}\right] \begin{bmatrix} W_d \\ \hdashline W \end{bmatrix},$$

where

$$\begin{aligned} N_{y_d w_d} &= P_{y_d w_d} + P_{y_d u}\{I - KP_{m u}\}^{-1}KP_{m w_d} \\ N_{y_d w} &= P_{y_d w} + P_{y_d u}\{I - KP_{m u}\}^{-1}KP_{m w} \\ N_{y w_d} &= P_{y w_d} + P_{y u}\{I - KP_{m u}\}^{-1}KP_{m w_d} \\ N_{y w} &= P_{y w} + P_{y u}\{I - KP_{m u}\}^{-1}KP_{m w}. \end{aligned}$$

- The modified standard form, incorporating the controller dynamics, is:

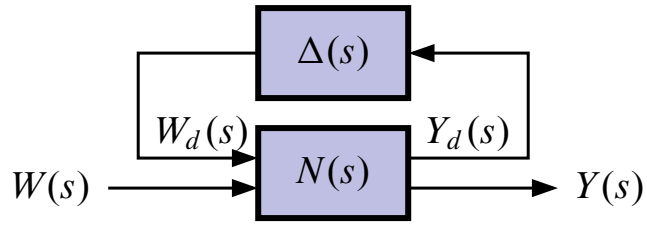


- The nominal system is assumed to be stable.
- The perturbation is also assumed to be stable.
- The combined system is then stable iff the feedback loop around the perturbation is internally stable.
- We evaluate the robust internal stability of the system by considering the feedback loop

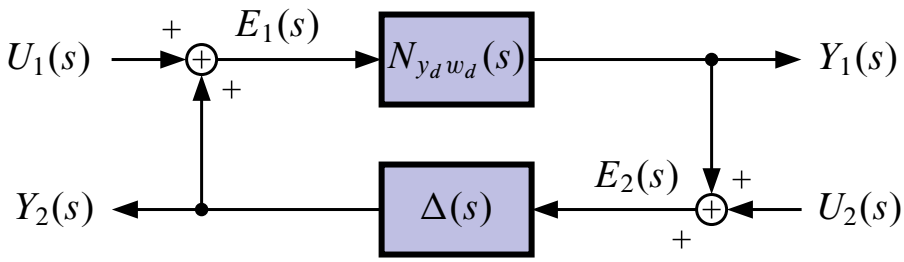


- The transfer functions defined by the system are:

$$\left[\begin{array}{c} E_1 \\ \hdashline E_2 \end{array}\right] = \left[\begin{array}{c:c} (I - \Delta N_{y_d w_d})^{-1} & (I - \Delta N_{y_d w_d})^{-1}\Delta \\ \hdashline (I - \Delta N_{y_d w_d})^{-1} N_{y_d w_d} & (I - \Delta N_{y_d w_d})^{-1} \end{array}\right] \left[\begin{array}{c} U_1 \\ \hdashline U_2 \end{array}\right].$$

- Consider the first transfer function

$$\begin{aligned} E_1(s) &= (I - \Delta(s) N_{y_d w_d}(s))^{-1} U_1(s) \\ &= \Delta(s) N_{y_d w_d}(s) E_1(s) + U_1(s). \end{aligned}$$

- In the time domain, ($\delta(t)$ is $\mathcal{L}^{-1}(\Delta(s))$, not the impulse function!)

$$e_1(t) = \delta(t) * n_{y_d w_d}(t) * e_1(t) + u_1(t).$$

- This part of the system is stable if a bounded input produces a bounded output. Take the $2$-norm of the signals to see:

$$\begin{aligned}\|e_1(t)\|_2 &= \left\|\delta(t) * n_{y_d w_d}(t) * e_1(t) + u_1(t)\right\|_2 \\ &\le \left\|\delta(t) * n_{y_d w_d}(t) * e_1(t)\right\|_2 + \|u_1(t)\|_2 .\end{aligned}$$

- We can use the $\infty$-norm to bound the terms on the right-hand-side

$$\begin{aligned}\|e_1(t)\|_2 &\le \left\|\Delta N_{y_d w_d}\right\|_\infty \|e_1(t)\|_2 + \|u_1(t)\|_2 \\ &\le \|\Delta\|_\infty \left\|N_{y_d w_d}\right\|_\infty \|e_1(t)\|_2 + \|u_1(t)\|_2 \\ &= (1 - \|\Delta\|_\infty \left\|N_{y_d w_d}\right\|_\infty)^{-1} \|u_1(t)\|_2 .\end{aligned}$$

- This is stable if the inverse is finite. Since $\|\Delta\|_\infty \le 1$ then the condition for stability is

$$\left\|N_{y_d w_d}\right\|_\infty < 1.$$

- The book examines the transfer function $E_1/U_2$. All three other transfer functions have exactly the same condition for robust stability.

**CONCLUSION:** System is robustly stable iff

$$\left\|N_{y_d w_d}\right\|_\infty = \sup_\omega \left\{\bar{\sigma}[N_{y_d w_d}(j\omega)]\right\} < 1.$$

**EXAMPLE:** We are given the nominal plant

$$G_o(s) = \frac{10}{s-1},$$

with unstructured additive uncertainty

$$\|\Delta(s)\|_\infty \le 1,$$

and controller $K(s) = -\dfrac{1}{2}$.

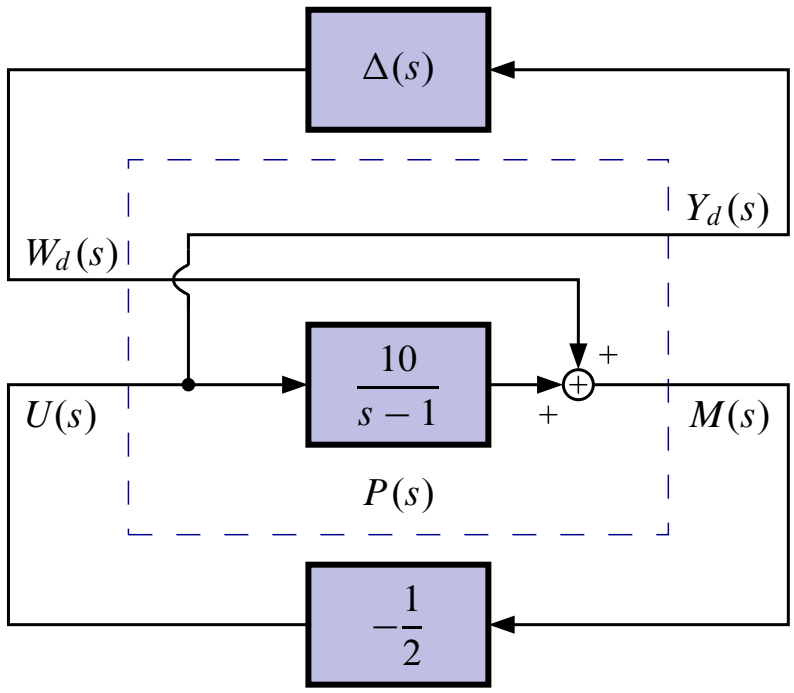


- We can compute

$$\begin{aligned} N_{y_d w_d}(s) &= P_{y_d w_d} + P_{y_d u}(I - KP_{mu})^{-1} KP_{mw_d} \\ &= 0 + (1)\left(1 - \left(-\frac{1}{2}\right)\left(\frac{10}{s-1}\right)\right)^{-1}\left(-\frac{1}{2}\right)(1) \\ &= \left(\frac{s+4}{s-1}\right)^{-1}\left(-\frac{1}{2}\right) = \frac{-\frac{1}{2}(s-1)}{s+4}. \end{aligned}$$

- The nominal closed-loop system has a pole at $s = -4$ (stable). Is the system robustly stable?
- Compute

$$\bar{\sigma}\{N_{y_d w_d}(j\omega)\} = |N_{y_d w_d}(j\omega)| = \frac{1}{2}\frac{\sqrt{\omega^2+1}}{\sqrt{\omega^2+16}}.$$

The $\infty$-norm is (the max is at $\omega \to \infty$)

$$\left\| N_{y_d w_d}(j\omega) \right\|_\infty = \sup_\omega \frac{1}{2}\frac{\sqrt{\omega^2+1}}{\sqrt{\omega^2+16}} = \frac{1}{2}.$$

- Therefore the system is robustly stable.

## 7.7: Robust stability [analysis for structured uncertainty]

- When the uncertainty has structure, the robust stability test $\left\| N_{y_d w_d} \right\|_\infty < 1$ is overly conservative.
- It assumes that $\Delta$ may have any structure subject to $\|\Delta\|_\infty \le 1$. A prediction of instability may be based on a specific $\Delta$ that is not allowed given its structure.
- When there is structure, we revert back to the internal stability test and notice that the closed-loop system becomes unstable for $\Delta$ such that

$$\det\{I - N_{y_d w_d}(s)\Delta(s)\} = 0.$$

- To determine robust stability, we solve for the "smallest" delta that makes this true

$$\inf_\omega \left\{ \min_{\Delta(j\omega)\in\bar{\Delta}} \left\{ \bar{\sigma}[\Delta(j\omega)] : \det\{I - N_{y_d w_d}(j\omega)\Delta(j\omega) = 0\} \right\} \right\}.$$

- If this value is greater than $1$ (the maximum size of $\Delta$) then the system is robustly stable.
- Easier to solve if we define

$$\mu_{\bar{\Delta}}(N) = \frac{1}{\min_{\Delta\in\bar{\Delta}}\{\bar{\sigma}[\Delta] : \det\{I - N_{y_d w_d}\Delta\} = 0\}}.$$

- $\mu_{\bar{\Delta}}$ is called the "Structured Singular Value".
- Then, the system is robustly stable iff

$$\sup_\omega \{\mu_{\bar{\Delta}}[N_{y_d w_d}(j\omega)]\} < 1.$$

*Computing $\mu_{\bar{\Delta}}(N_{y_d w_d})$.*

- The bad news: There is no closed-form solution or numeric algorithm to compute $\mu_{\bar{\Delta}}(N_{y_d w_d})$ in the general case.

- The better news: We can often find quite good bounds on it. In particular, we know that

$$\mu_{\bar{\Delta}}(N_{y_d w_d}) \le \bar{\sigma}(N_{y_d w_d}).$$

- This should be obvious since the structured singular value is a special case of the regular singular value.
- To make this bound better, consider:

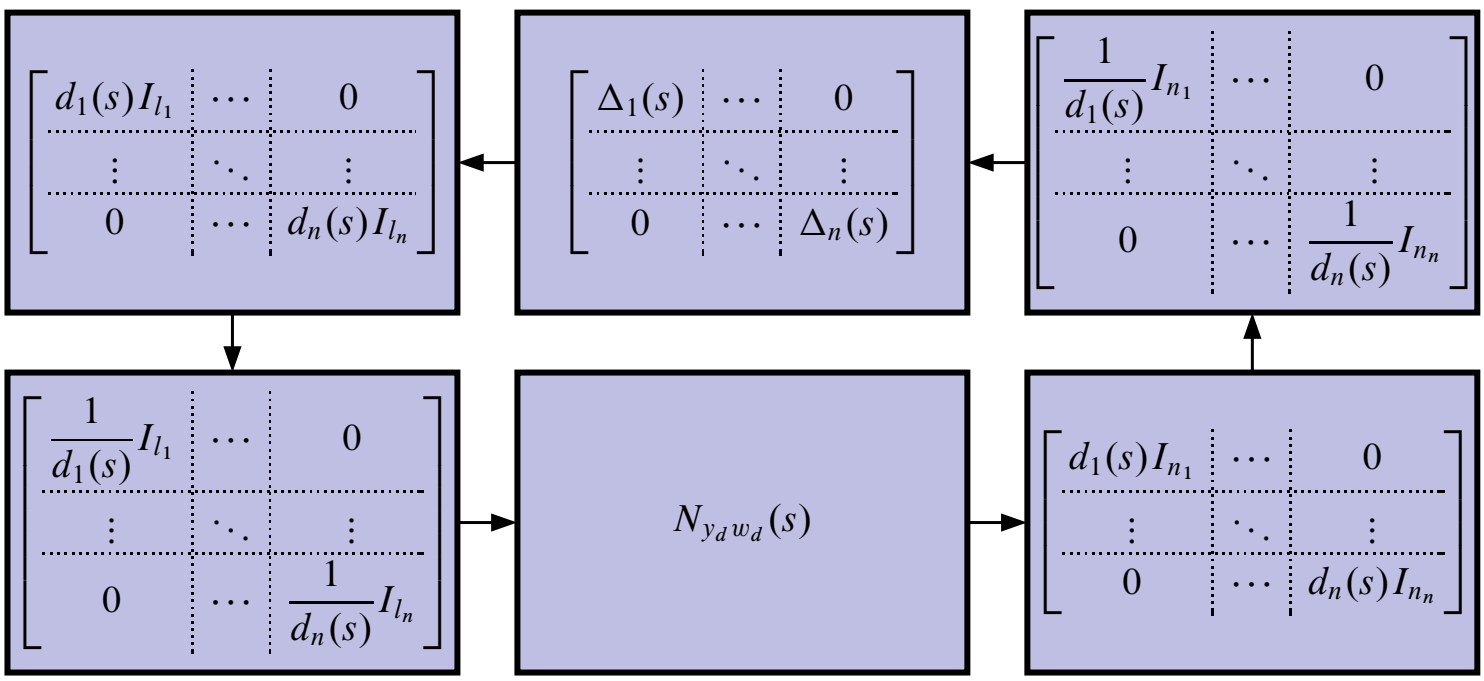


or

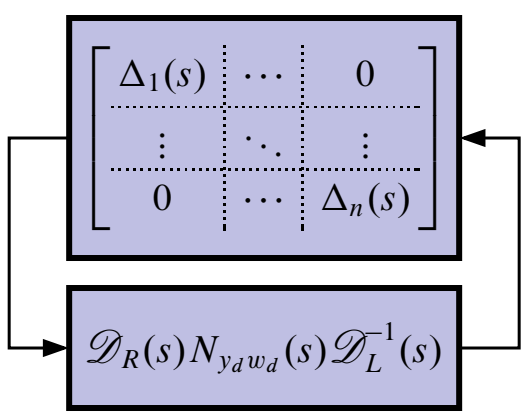


- We see that

$$\mu_{\bar{\Delta}}(N(s)) = \mu_{\bar{\Delta}}[\mathscr{D}_R(s)N_{y_d w_d}(s)\mathscr{D}_L^{-1}(s)] \le \bar{\sigma}[\mathscr{D}_R(s)N_{y_d w_d}(s)\mathscr{D}_L^{-1}(s)],$$

for any $\mathscr{D}_R$ and $\mathscr{D}_L$.

- In particular,

$$\mu_{\bar{\Delta}}(N_{y_d w_d}(s)) \le \min_{\substack{\{d_1,\ldots d_n\} \\ d_i \in (0,\infty)}} \bar{\sigma}[\mathscr{D}_R(s)N_{y_d w_d}(s)\mathscr{D}_L^{-1}(s)],$$

- This minimization is a convex-optimization problem for which a unique minima exists, and very efficient algorithms exist to solve it. The final bound is usually very close to the true structured-singular value.

**EXAMPLE:** Compute the $\mu$ value for

$$N_{y_d w_d}(s) = \begin{bmatrix} \dfrac{1}{s+1} & \dfrac{1}{s+1} \\ \dfrac{s}{s+1} & \dfrac{s}{s+1} \end{bmatrix}.$$

- Here, we use the optimization toolbox, but you could code your own optimization routine (gradient descent, for example).

```
function mustuff
global Nydwd
dscale=[1;1]; % initial guess for dscale
w=logspace(-2,2,100);
for i=1:100,
  Nydwd=[1/(1j*w(i)+1) 1/(1j*w(i)+1);
     1j*w(i)/(1j*w(i)+1) 1j*w(i)/(1j*w(i)+1)];
  s(i)=max(svd(Nydwd));
  dscale=fminunc(@estimmu,dscale);
  mui(i)=estimmu(dscale);
end
max(s),max(mui),semilogx(w,s,w,mui);
return

function muout = estimmu(d)
  global Nydwd
  muout = max(svd(diag(d)*Nydwd*diag(1./d)));
return
```

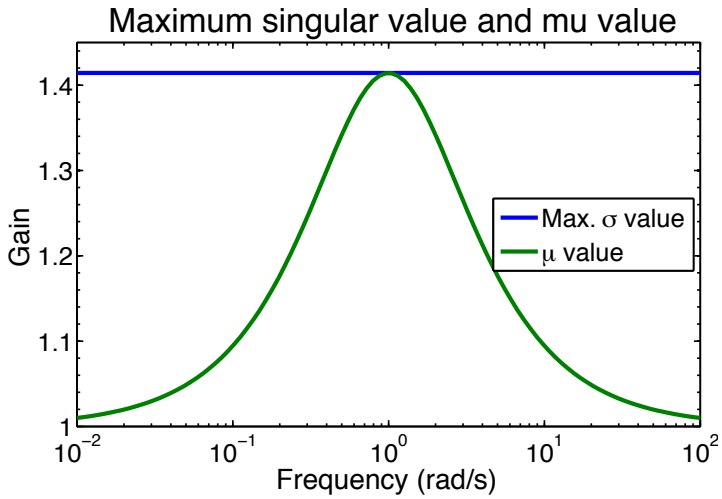

## 7.8: Performance robustness [analysis]

- Robust performance is defined in different ways than we are accustomed to.
- Bounds are placed on certain performance variables, such as steady-state error, disturbance in the output, control effort.
- These bounds are scaled in standard form, such that the transfer function between the reference- and disturbance inputs and the performance outputs must be bounded by infinity-norm $1$:

$$\left\| T_{yw} \right\|_\infty < 1,$$

  where $T_{yw}$ is the closed-loop transfer function between the inputs and performance variables.
- The closed loop transfer function is

$$T_{yw} = N_{yw_d}(s)[I - \Delta(s)N_{y_d w_d}(s)]^{-1}\Delta(s)N_{y_d w}(s) + N_{yw}(s).$$

- We can visualize this as a structured-singular-value stability problem, where we add an additional "uncertainty" block.

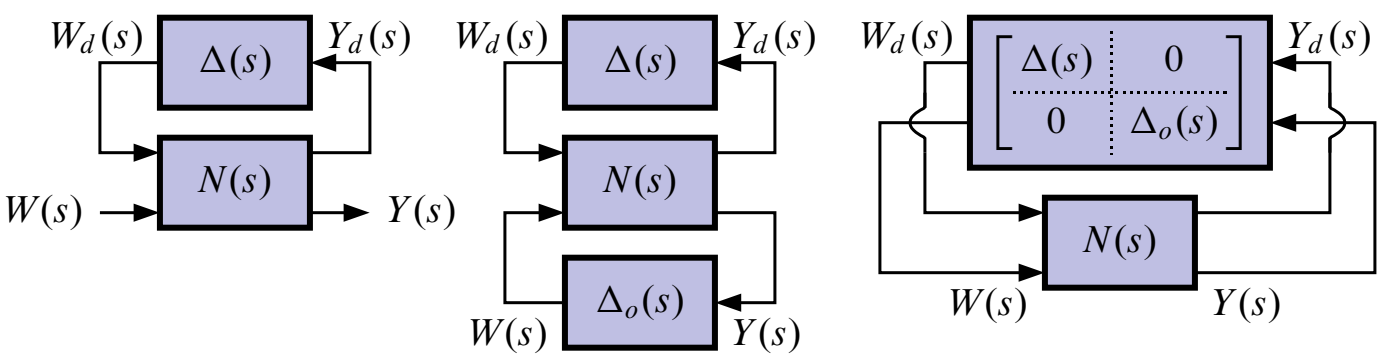


**EXAMPLE:** Consider a plant with uncertain pole location:

$$G(s) = \frac{1}{s + 1 + \delta}; \quad \delta \in \{-0.2, 0.2\}.$$

- A proportional-gain controller $K$ is to be used for this system.

- The reference input is bandlimited to less than $10\,\mathrm{rad\,s^{-1}}$. Tracking error should be less than $0.1$.
- We can then bound the closed-loop transfer function from reference input to error output.

$$|T_{yw}(j\omega)| \le \begin{cases} 0.1, & \omega \le 10; \\ \infty, & \omega > 10. \end{cases}$$

- The $\infty$ indicates that error in frequencies above $10\,\mathrm{rad\,s^{-1}}$ is unimportant.
- We normalize the performance goal using a weighting function

$$W(j\omega) = \begin{cases} 10, & \omega \le 10; \\ 0, & \omega > 10. \end{cases}$$

- A low-order rational approximation of this weighting function is

$$W(j\omega) = \frac{150}{j\omega + 10}.$$

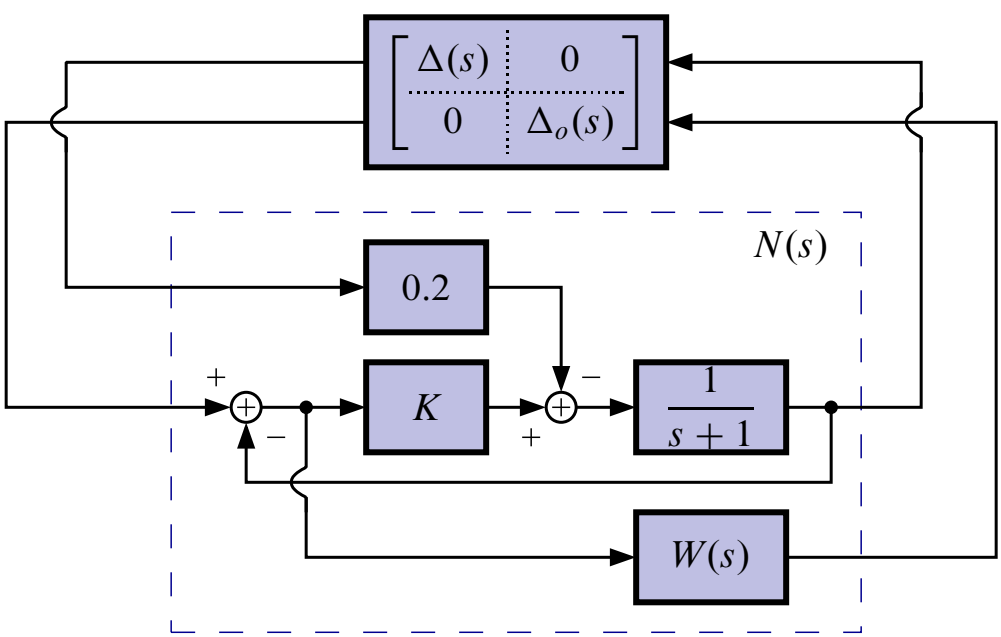


- Robust performance can be analyzed by using the SSV by appending the weighting function to the plant and adding the performance block

$\Delta_o$. The transfer function of the system is

$$N(s) = \begin{bmatrix} \dfrac{-0.2}{s+1+K} & \dfrac{K}{s+1+K} \\ \dfrac{30}{(s+1+K)(s+10)} & \dfrac{150(s+1)}{(s+1+K)(s+10)} \end{bmatrix}.$$

- Robust performance is tested by generating the SSV of $N(j\omega)$. The system is stable and meets the performance specifications for all admissible perturbations if SSV is less than $1$ for all frequencies.

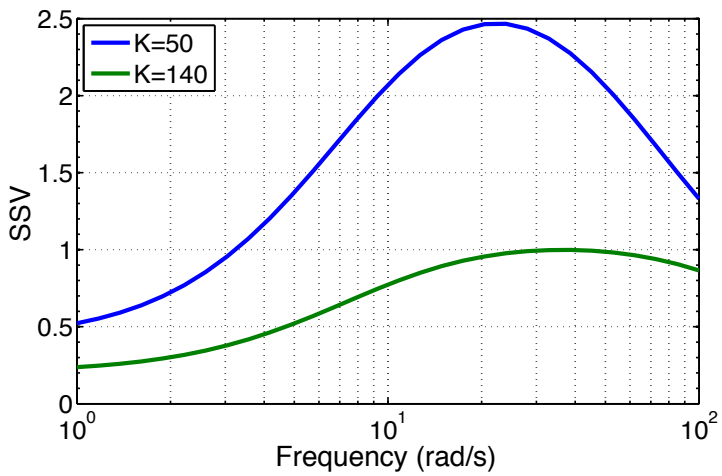


## Design of robust controllers

- Design of controllers to achieve robust stability and performance is challenging.
- Instead of minimizing quadratic cost functions ($\mathscr{H}_2$ control), $\infty$-norm cost functions are minimized ($\mathscr{H}_\infty$ control).
- Numeric optimization methods are required ➠ No closed-form or algorithmic solution is available. A sub-optimal controller is generally obtained, but is accepted.
- The subject of chapters 9–11 in the text.

- We will encounter familiar concepts such as:
  - Cost functions,
  - Optimization via calculus of variations,
  - Riccati equations,
  - Hamiltonian systems,
  - Regulators, Estimators and so forth.

# Appendix: Doyle code

```
% DOYLE.M - Demonstrate LQG lack of robustness w/ Doyle's example.
% m-file originally by Jonathan How. Modified by G. Plett 10 Feb 1999.

A=[1 1; 0 1]; Bu=[0; 1]; Cy=[1 0];
f=logspace(-8,3,500); s=j*f;

Q=ones(2); Sw=Q;
R=1; Sv=R;

[K,P]=lqr(A,Bu,Q,R);
[L,Sigmae]=lqr(A',Cy',Sw,Sv); L=L';

Acl=A-Bu*K-L*Cy; Bcl=L; Ccl=K; Dcl=0;

Glqr = freqresp(A,Bu,K,0,1,s);% LQR system freqresp
Gcl = freqresp(Acl,Bcl,Ccl,Dcl,1,s);% COMPENSATOR freqresp
Gp = freqresp(A,Bu,Cy,0,1,s);% PLANT freqresp

circ=exp(pi*s/max(abs(s)));

clf; subplot(131);
plot(-1,0,'r+','markersize',18); hold on;
plot(Gp.*Gcl); plot(conj(Gp.*Gcl));% Nyquist LQG
plot(circ,'-.'); plot(-circ,'-.');
plot(-1+circ,':'); plot(-1-circ,':');
plot([0 0],[-2 2],'y--'); plot([-2 2],[0 0],'y--');
axis([-1.25 .25 -.75 .75]); axis('square')
text(-.5,.5,['R = ',num2str(R)]);
plot(-1,0,'r+','markersize',18);
title('Doyle Example: LQG Nyquist'); xlabel('Real'); ylabel('Imag');

subplot(132);
plot(-1,0,'r+','markersize',18); hold on;
plot(Gp.*Gcl); plot(conj(Gp.*Gcl));% Nyquist LQG
plot(circ,'-.'); plot(-circ,'-.');
plot(-1+circ,':'); plot(-1-circ,':');
plot([0 0],[-2 2],'y--'); plot([-2 2],[0 0],'y--');
axis([-1.1 -.9 -.1 .1]); axis('square');
plot(-1,0,'r+','markersize',18);
title('Doyle Example: LQG Nyquist (zoom)'); xlabel('Real'); ylabel('Imag')
```

```
subplot(133);
plot(-1,0,'r+','markersize',18); hold on;
plot(Glqr); plot(conj(Glqr));
plot(circ,'-.'); plot(-circ,'-.');
plot(-1+circ,':'); plot(-1-circ,':');
plot([0 0],[-2 2],'y--'); plot([-3 2],[0 0],'y--');
axis([-2.5 .5 -1.5 1.5]); axis('square')
text(-1.5,.5,['R = ',num2str(R)]);
plot(-1,0,'r+','markersize',18);
title('Doyle Example: LQR Nyquist'); xlabel('Real'); ylabel('Imag');
```